The WingLine 77 folding-door system connected to the carcase side makes child's play of moving doors weighing even as much as 25 kg. With precision-controlled, velvety smooth running action. Bonus: side-mounting with Sensys 8645i fast-assembly concealed hinge.

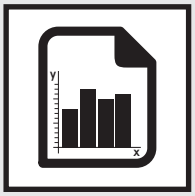

Technical details in brief 598

Operating principle 598

System components 599 – 600

Technical Information 601

Mounting 602 – 603

Assembly aids 2681

Technical details in brief

- Folding door system with 2 door panels
- Overlay door position
- For wooden doors
- Suitable for use with soft-closing Sensys hinge
- Door panel weight up to 25 kg
- Door height up to 2400 mm
- Door-panel width up to 500 mm
- Height adjustment +/- 3 mm
- Centre panels recessed 40 mm
- Tested with 40000 cycles

Min. and max. door sizes

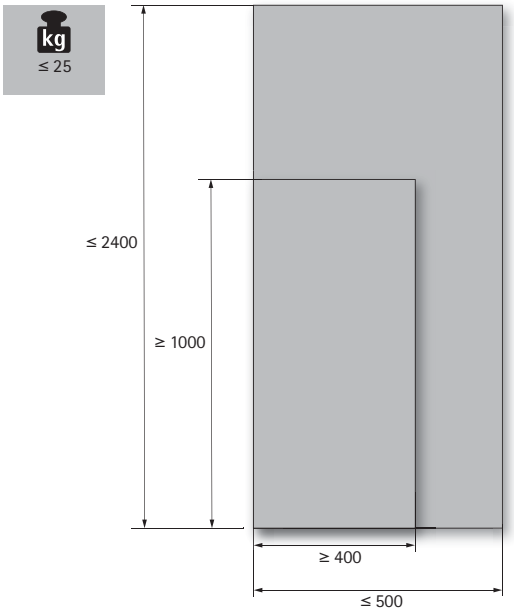

Operating principle / folding door with 2 panels

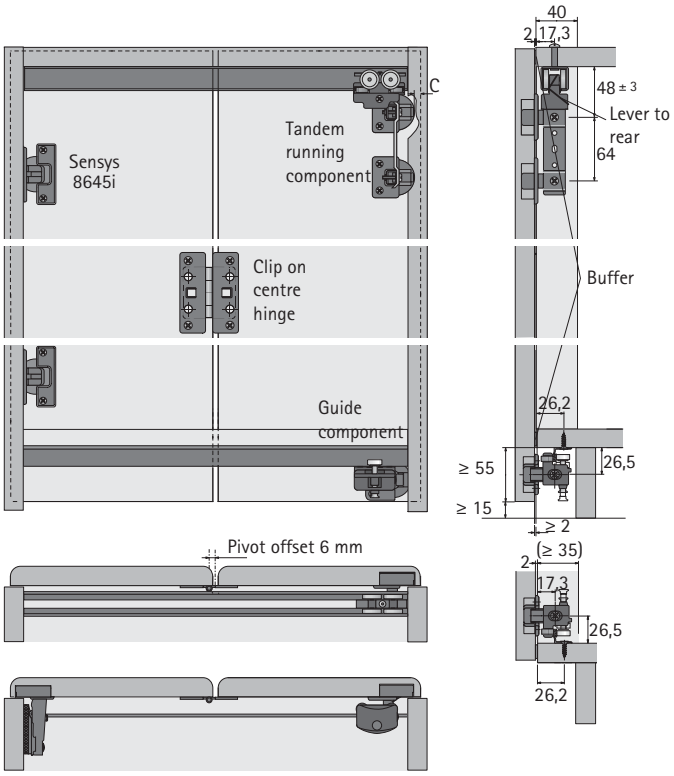

Guide profile

- Screw-on type, screw-mounting positions pre-drilled
- Length 2000 mm
- Aluminium, silver anodised

Order no.	PU
0 072 919	1/4 ea.

Runner profile

- Screw-on type, screw-mounting positions pre-drilled
- Length 2000 mm
- Powder-coated steel, silver

Order no.	PU
1 063 278	1/4 ea.

Set, WwingLine 77

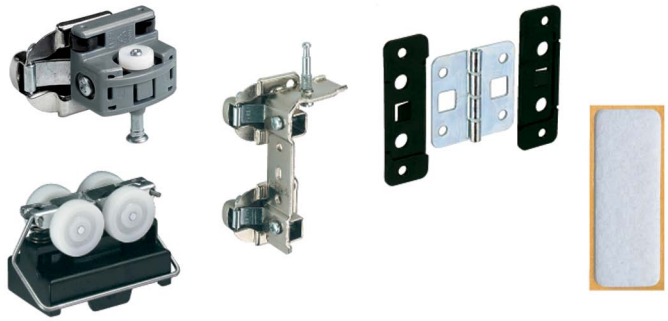

- Set contains all the parts required for 1 folding-sliding door with 2 panels, right or left
- For runner and guide profile, see page 599

Set comprises:
- 1 tandem running component
- 1 support with height-adjustment capability
- 1 guide component
- 4 clip-on centre hinges
- 2 damping felts

Hinge side	Order no.	PU
left	**0 070 983**	1 set
clockwise	**0 070 984**	1 set

Tandem runner

Quantity for WingLine 77
1

Support

Quantity for WingLine 77
1

Clip-on centre hinge for folding doors

Quantity for WingLine 77
4

Guide component

Quantity for WingLine 77 / 770
1

4 mm damping felt

Quantity for WingLine 77
2

2-panel folding door

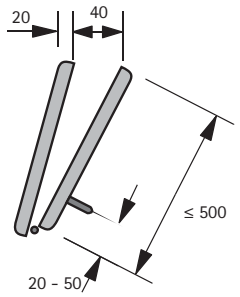

2-panel folding door

Panel width max. 1000 mm
Door weight / panel max. 25 kg
Door panel height max. 2400 mm

Recommended door panel contours for reducing risk of crushing

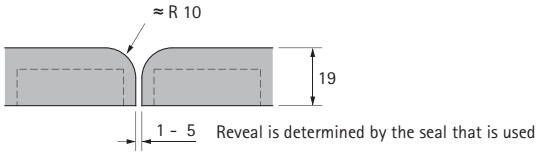

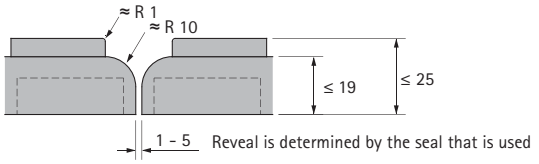

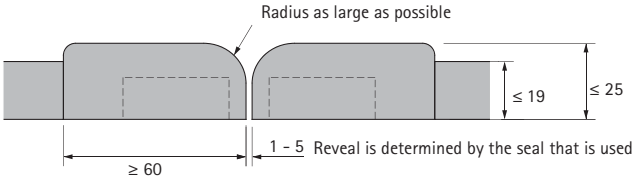

2-panel door set

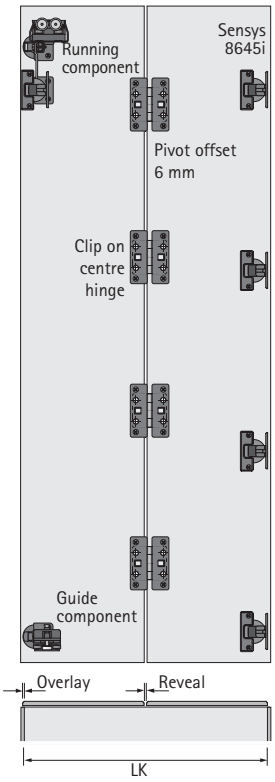

Drilling pattern

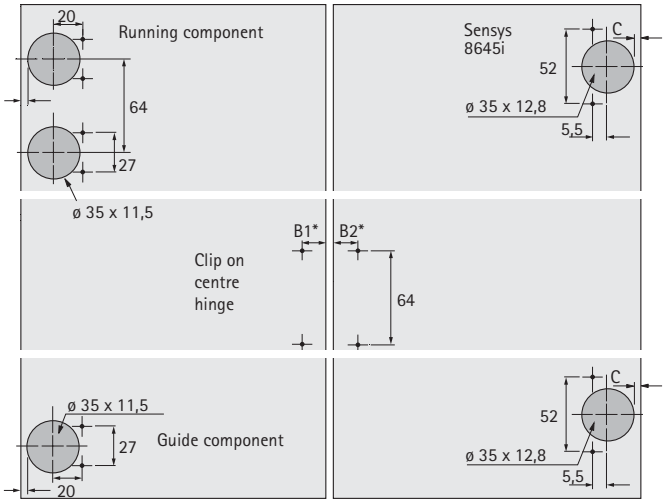

Hole spacing mm					
*B1	10,5	11	11,5	12	12,5
*B2	22,5	23	23,5	24	24,5
Reveal mm	5	4	3	2	1

Calculation of door width / door panels
Door width = inside carcase width + (2 x overlay*)
Door panel width = (inside carcase width – 1 x reveal + 2 x overlay*) ÷ 2
* Overlay: max. 15 mm, C dimension 6 mm

Cabinet
The top panel design should be arranged so that the top panel does not sag by more than 1,5 mm under the load of the folded doors

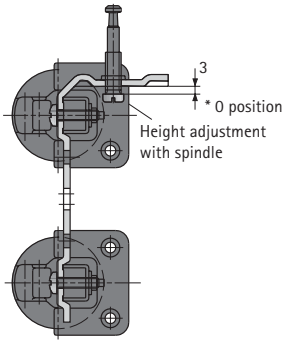

Mounting runner profile

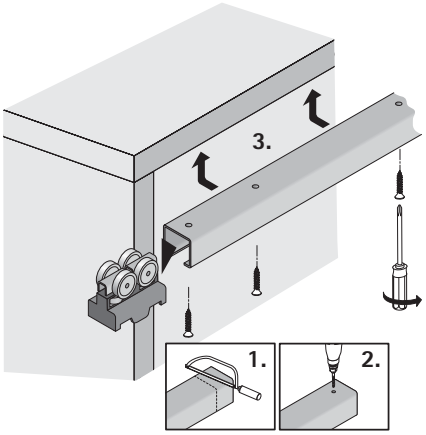

Mounting guide profile

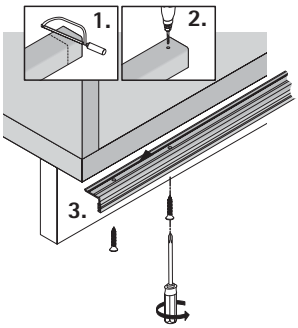

Preparing door set

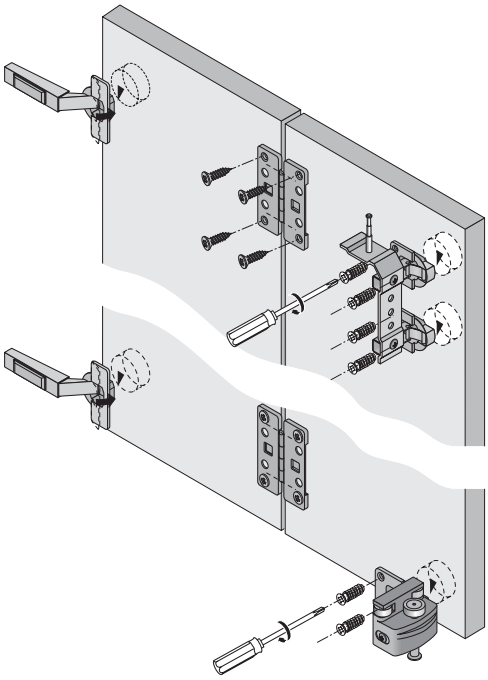
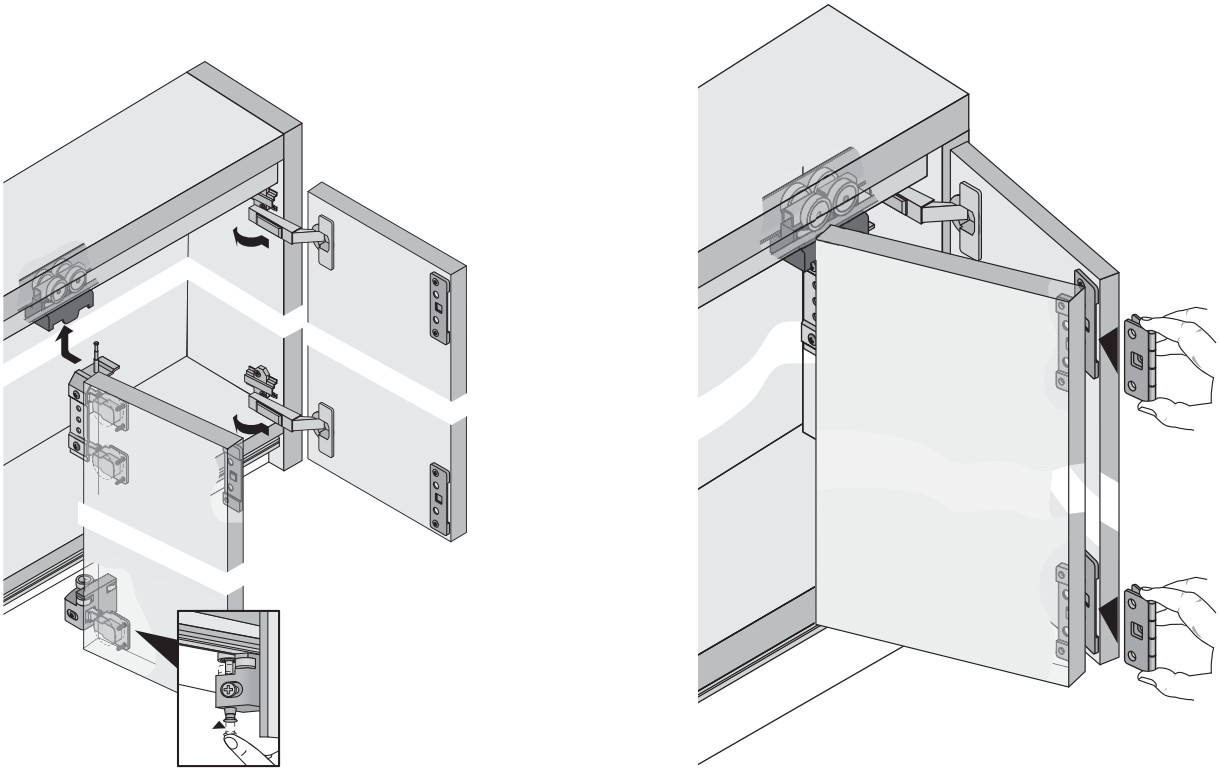
Installing door panel / door set