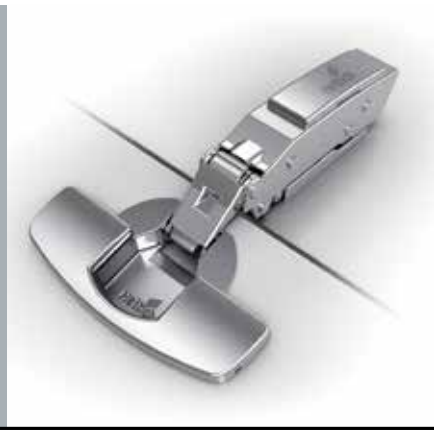

Exclusive furniture design:

Sensys hinge for thin doors

INTERFER

Technik für Möbel

Hettich

Fascinatingly delicate furniture design with the
Sensys thin door hinge

INTERFER
www.interfer.pt

More design flexibility!
Whether an airy light purist look, classy combined facing panels in glass or exclusive materials – suddenly everything is possible, providing endless design flexibility.

With an insertion depth of not even 8 mm, the new Sensys thin door hinge opens up options you never imagined were possible.

At the same time, of course, it also provides all of the benefits familiar from the Sensys product family.

Differentiation made easy!
A classy thin front makes premium furniture out of a standard carcase. Door thickness can be reduced to 10 mm, letting heavy materials create a lightweight door that can be used with the usual number of hinges.

Conserving resources!
Of course, standard materials, like chipboard or MDF, can be made much thinner too. Significantly reducing weight and volume, e.g. for shipping.

Four good reasons for **Sensys**

1. Reduce costs!
Sensys provides the best silent and gentle closing performance in its class. This means that compared to similar products, many common door formats require one hinge less – while still benefiting from Silent System excellence.

2. Maximum customer satisfaction!
Whether in a sunny kitchen or on arrival at an unheated ski lodge: with temperature resistant Silent System, Sensys always works reliably over a broad range of temperatures from 5°C to 40°C.

3. Quickly fitted – and works straight away!
No matter whether large or heavy, the door always closes gently and reliably. As a result of the unusually wide automatic closing angle of 35°, there is no need to adjust or deactivate Silent System elements.

4. Put the final touch to your furniture design!
Outstanding furniture design doesn't stop at the hinges: the elegant and award winning Sensys hinge complements the look of your furniture.

Excitingly different: thin doors in exclusive materials


Solid surface material


Aluminium


Engineered wood with glass facing panel in carbon look

DESIGN AWARD 2016

GERMAN DESIGN AWARD SPECIAL 2017

Award winning design!
The Sensys thin door hinge has won many design awards as well. Alongside elegant looks, it leaves absolutely no margin of doubt by opening up a whole host of new options in designing furniture.

Fast assembly concealed hinge with integrated Silent System

- **Sensys 8646i for thin doors**
- **110° opening angle**

- Concealed hinge with clip on installation and integrated Silent System
- Quality classification under EN 15570, Level 3
- For door thickness of 10 – 19 mm
- Cup diameter 35 mm
- Cup depth 7.8 mm
- Integrated overlay adjustment + 2 mm / - 2 mm
- Integrated depth adjustment + 3 mm / - 2 mm
- Height adjustment at mounting plate
- Hinge arm material: steel, nickel plated
- Hinge cup material: steel, nickel plated
- **Note:** The method selected for attaching the hinge to the door must be suitable for the type and quality of door material and tested for a secure fit

Sensys 8646i, opening angle 110°

			full overlay	half overlay	inset	
Cup assembly	Drilling pattern	Mounting hole ø x T mm	Base B 12.5 mm	Base B 3 mm	Base B -4 mm	PU
For screwing on TH 52	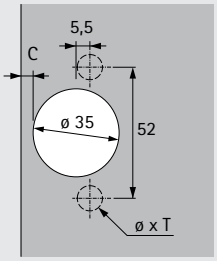	-	**9 094 270**	**9 094 280**	**9 094 290**	50 ea.
For pressing in TH 53		ø 10 x 8	**9 094 271**	**9 094 281**	**9 094 291**	50 ea.
With premounted expanding sockets TH 58		ø 10 x 8	**9 094 276**	**9 094 286**	**9 094 296**	50 ea.
For screwing on TB 52	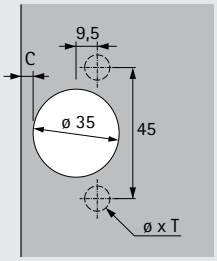	-	**9 094 300**	**9 094 310**	**9 094 320**	50 ea.
For pressing in TB 53		ø 8 x 8	**9 094 301**	**9 094 311**	**9 094 321**	50 ea.
With premounted expanding sockets TB 58		ø 8 x 8	**9 094 306**	**9 094 316**	**9 094 326**	50 ea.

Fast assembly concealed hinge with integrated Silent System

- **Sensys 8646i for thin doors**
- **110° opening angle**

- Concealed hinge with clip on installation and integrated Silent System
- Quality classification under EN 15570, Level 3
- For door thickness of 10 – 19 mm
- Cup diameter 35 mm
- Cup depth 7.8 mm
- Integrated overlay adjustment + 2 mm / - 2 mm
- Integrated depth adjustment + 3 mm / - 2 mm
- Height adjustment at mounting plate
- Hinge arm material: steel, nickel plated
- Hinge cup material: steel, nickel plated
- **Note:** The method selected for attaching the hinge to the door must be suitable for the type and quality of door material and tested for a secure fit

Sensys 8646i, opening angle 110°

			full overlay	half overlay	inset	
Cup assembly	Drilling pattern	Mounting hole ø x T mm	Base B 12.5 mm	Base B 3 mm	Base B -4 mm	PU
For screwing on TH 52	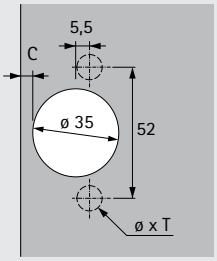	-	**9 094 000**	**9 094 010**	**9 094 020**	200 ea.
For pressing in TH 53		ø 10 x 8	**9 094 001**	**9 094 011**	**9 094 021**	200 ea.
With premounted expanding sockets TH 58		ø 10 x 8	**9 094 006**	**9 094 016**	**9 094 026**	200 ea.
For screwing on TB 52	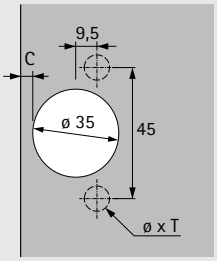	-	**9 094 030**	**9 094 040**	**9 094 050**	200 ea.
For pressing in TB 53		ø 8 x 8	**9 094 031**	**9 094 041**	**9 094 051**	200 ea.
With premounted expanding sockets TB 58		ø 8 x 8	**9 094 036**	**9 094 046**	**9 094 056**	200 ea.

Fast assembly concealed hinge without integrated Silent System

- **Sensys 8646 for thin doors**
- **110° opening angle**

- Concealed hinge with clip on installation without integrated Silent System
- Quality classification under EN 15570, Level 3
- For door thickness of 10 – 19 mm
- Cup diameter 35 mm
- Cup depth 7.8 mm
- Integrated overlay adjustment + 2 mm / - 2 mm
- Integrated depth adjustment + 3 mm / - 2 mm
- Height adjustment at mounting plate
- Hinge arm material: steel, nickel plated
- Hinge cup material: steel, nickel plated
- **Note:** The method selected for attaching the hinge to the door must be suitable for the type and quality of door material and tested for a secure fit

Sensys 8646, opening angle 110°

			full overlay	half overlay	inset	
Cup assembly	Drilling pattern	Mounting hole ø x T mm	Base B 12.5 mm	Base B 3 mm	Base B -4 mm	PU
For screwing on TH 52	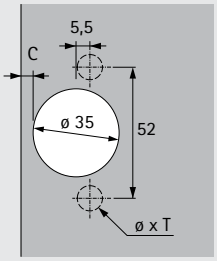	-	**9 094 360**	**9 094 370**	**9 094 380**	50 ea.
For pressing in TH 53		ø 10 x 8	**9 094 361**	**9 094 371**	**9 094 381**	50 ea.
With premounted expanding sockets TH 58		ø 10 x 8	**9 094 366**	**9 094 376**	**9 094 386**	50 ea.
For screwing on TB 52	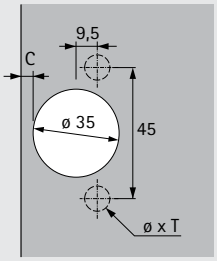	-	**9 094 390**	**9 094 400**	**9 094 410**	50 ea.
For pressing in TB 53		ø 8 x 8	**9 094 391**	**9 094 401**	**9 094 411**	50 ea.
With premounted expanding sockets TB 58		ø 8 x 8	**9 094 396**	**9 094 406**	**9 094 416**	50 ea.

Fast assembly concealed hinge without self closing feature

- **Sensys 8676 for thin doors**
- **110° opening angle**

- Hinge with clip on installation without self closing feature
- For example, for Push to open applications
- Quality classification under EN 15570, Level 3
- For door thickness of 10 – 19 mm
- Cup diameter 35 mm
- Cup depth 7.8 mm
- Integrated overlay adjustment + 2 mm / - 2 mm
- Integrated depth adjustment + 3 mm / - 2 mm
- Height adjustment at mounting plate
- Hinge arm material: steel, nickel plated
- Hinge cup material: steel, nickel plated
- **Note:** The method selected for attaching the hinge to the door must be suitable for the type and quality of door material and tested for a secure fit

Sensys 8676, opening angle 110°

			full overlay 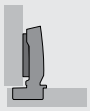	half overlay 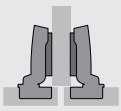	inset 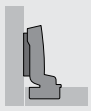	
Cup assembly	Drilling pattern	Mounting hole ø x T mm	Base B 12.5 mm	Base B 3 mm	Base B -4 mm	PU
For screwing on TH 52	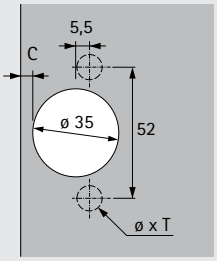	-	**9 094 450**	**9 094 460**	**9 094 470**	50 ea.
For pressing in TH 53		ø 10 x 8	**9 094 451**	**9 094 461**	**9 094 471**	50 ea.
With premounted expanding sockets TH 58		ø 10 x 8	**9 094 456**	**9 094 466**	**9 094 476**	50 ea.
For screwing on TB 52	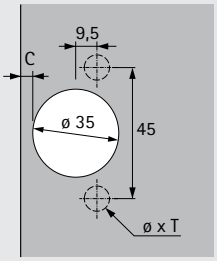	-	**9 094 480**	**9 094 490**	**9 094 500**	50 ea.
For pressing in TB 53		ø 8 x 8	**9 094 481**	**9 094 491**	**9 094 501**	50 ea.
With premounted expanding sockets TB 58		ø 8 x 8	**9 094 486**	**9 094 496**	**9 094 506**	50 ea.

Minimum reveal per door

Door thickness mm	Cup distance C mm 3.0	4.0	4.5	5.0	6.0	7.0
10	0.1	0.1	0.1	0.1	0.1	0.1
11	0.2	0.2	0.2	0.2	0.2	0.2
12	0.4	0.4	0.4	0.4	0.4	0.4
13	0.6	0.6	0.5	0.5	0.5	0.5
14	0.8	0.8	0.7	0.7	0.7	0.7
15	1.0	1.0	1.0	1.0	0.9	0.9
16	1.3	1.3	1.3	1.2	1.2	1.2
17	1.4	1.5	1.5	1.6	1.6	1.7
18	1.8	1.8	1.9	1.9	2.0	2.0
19	2.1	2.2	2.3	2.3	2.3	2.4

Note:

The table entries refer to doors with an edge radius of 1 mm.

Protrusions / installed depth

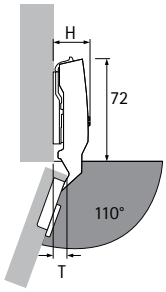

Hinge protrusion H / door protrusion T for distance D = 0 mm and cup distance C = 3 mm

Door mounting option	H mm	T mm
Full overlay	25.0	8.5
Half overlay	31.0	18.0
Inset	38.0	25.0

full overlay

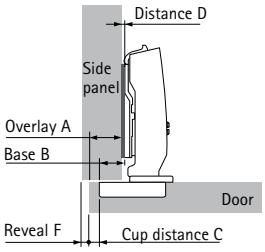

Distance D = C + B - A
= cup distance C + 12.5 mm - overlay A

Overlay mm	Cup distance C mm 3.0	4.0	4.5	5.0	6.0	7.0
	Distance D mm					
10	5.5	6.5	7.0	7.5	8.5	9.5
11	4.5	5.5	6.0	6.5	7.5	8.5
12	3.5	4.5	5.0	5.5	6.5	7.5
13	2.5	3.5	4.0	4.5	5.5	6.5
14	1.5	2.5	3.0	3.5	4.5	5.5
15	0.5	1.5	2.0	2.5	3.5	4.5
16		0.5	1.0	1.5	2.5	3.5
17			0.0	0.5	1.5	2.5
18					0.5	1.5
19						0.5

half overlay

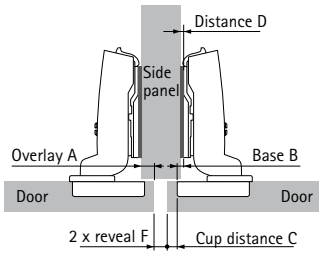

Distance D = C + B - A
= cup distance C + 3 mm - overlay A

Overlay mm	Cup distance C mm 3.0	4.0	4.5	5.0	6.0	7.0
	Distance D mm					
0.5	5.5	6.5	7.0	7.5	8.5	9.5
1.5	4.5	5.5	6.0	6.5	7.5	8.5
2.5	3.5	4.5	5.0	5.5	6.5	7.5
3.5	2.5	3.5	4.0	4.5	5.5	6.5
4.5	1.5	2.5	3.0	3.5	4.5	5.5
5.5	0.5	1.5	2.0	2.5	3.5	4.5
6.5		0.5	1.0	1.5	2.5	3.5
7.5			0.0	0.5	1.5	2.5
8.5					0.5	1.5
9.5						0.5

inset

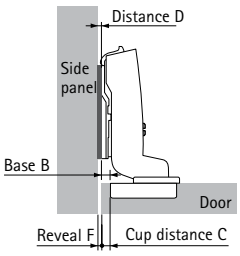

Distance D = C + B + F
= cup distance C - 4 mm + reveal F

Door thickness mm	Cup distance C mm 3.0	4.0	4.5	5.0	6.0	7.0
	Distance D mm					
10		0.1	0.6	1.1	2.1	3.1
11		0.2	0.7	1.2	2.2	3.2
12		0.4	0.9	1.4	2.4	3.3
13		0.6	1.0	1.5	2.5	3.5
14		0.8	1.2	1.7	2.7	3.7
15	0.0	1.0	1.5	2.0	2.9	3.9
16	0.3	1.3	1.8	2.2	3.2	4.2
17	0.4	1.5	2.0	2.6	3.6	4.7
18	0.8	1.8	2.4	2.9	4.0	5.0
19	1.1	2.2	2.7	3.3	4.3	5.4

Advice

- For mounting plates and accessories, see pages 10 - 15
- For fitting information, mounting advice and quality criteria, see pages 16 - 20

Cross mounting plate for screwing on

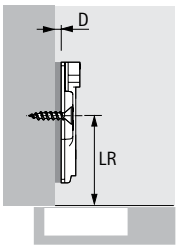

- For 4.5 mm ø x 16 mm countersunk screws
- Quality classification under EN 15570, Level 3
- Hole spacing 32 mm
- Oblong hole height adjustment ± 3 mm
- Steel, nickel plated

Hole line distance LR mm	Order no. / Distance D mm				PU
	0.0	1.5	3.0	5.0	
28	9 071 570	9 071 571	9 071 572	9 071 573	200 ea.
37	9 075 005	9 075 006	9 075 007	9 075 008	50 ea.
37	9 071 575	9 071 576	9 071 577	9 071 578	200 ea.

Cross mounting plate with expanding sockets and special screws

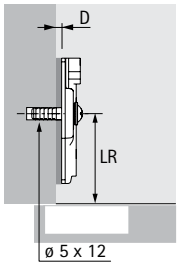

- For ø 5 x 12 mm holes
- Quality classification under EN 15570, Level 3
- Hole spacing 32 mm
- Oblong hole height adjustment ± 2 mm
- Steel, nickel plated

Hole line distance LR mm	Order no. / Distance D mm				PU
	0.0	1.5	3.0	5.0	
37	9 075 025	9 075 026	9 075 027	9 075 028	50 ea.
37	9 071 595	9 071 596	9 071 597	9 071 598	200 ea.

Cross mounting plate with expanding sockets and special screws

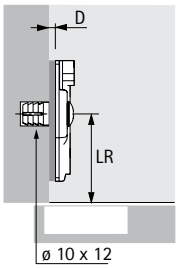

- For ø 10 x 12 mm holes
- Quality classification under EN 15570, Level 3
- Hole spacing 32 mm
- Oblong hole height adjustment ± 2 mm
- Steel, nickel plated

Hole line distance LR mm	Order no. / Distance D mm				PU
	0.0	1.5	3.0	5.0	
28	9 071 600	9 071 601	9 071 602	9 071 603	200 ea.
37	9 075 035	9 075 036	9 075 037	9 075 038	50 ea.
37	9 071 605	9 071 606	9 071 607	9 071 608	200 ea.

Cross mounting plate with premounted Euro screws

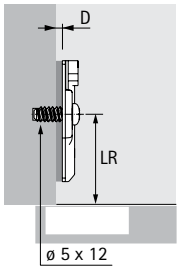

- For ø 5 x 12 mm holes
- Quality classification under EN 15570, Level 3
- Hole spacing 32 mm
- Oblong hole height adjustment ± 3 mm
- Steel, nickel plated

Hole line distance LR mm	Order no. / Distance D mm				PU
	0.0	1.5	3.0	5.0	
28	9 071 620	9 071 621	9 071 622	9 071 623	200 ea.
37	9 075 055	9 075 056	9 075 057	9 075 058	50 ea.
37	9 071 625	9 071 626	9 071 627	9 071 628	200 ea.

Linear mounting plate for screwing on

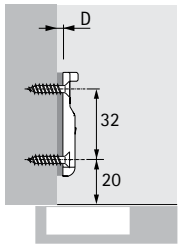

- For 3.5 mm ø x 16 mm countersunk screws
- Quality classification under EN 15570, Level 3
- Oblong hole height adjustment ± 1.6 mm
- Zinc die-cast nickel plated

Hole line distance LR mm	Order no. / Distance D mm		PU
	0.5	3.0	
20	9 088 244	9 088 245	50 ea.

Linear mounting plate for pressing in

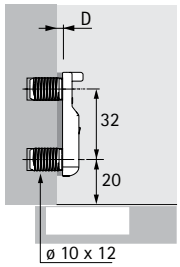

- For drilling ø 10 mm x 12 mm
- Quality classification under EN 15570, Level 3
- Oblong hole height adjustment ± 1.6 mm
- Zinc die-cast nickel plated

Hole line distance LR mm	Order no. / Distance D mm		PU
	0.5	3.0	
20	9 088 242	9 088 243	50 ea.

Cross mounting plate with premounted chipboard screws

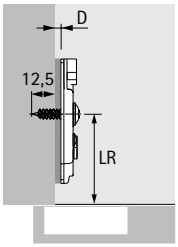

- For holes with max. ø 2.5 mm
- Quality classification under EN 15570, Level 3
- Hole spacing 32 mm
- Eccentric cam height adjustment ± 2 mm
- Steel, nickel plated

Hole line distance LR mm	Order no. / Distance D mm				PU
	0.0	1.5	3.0	5.0	
37	9 075 085	9 075 086	9 075 087	9 075 088	50 ea.
37	9 071 670	9 071 671	9 071 672	9 071 673	200 ea.

Cross mounting plate with premounted Euro screws

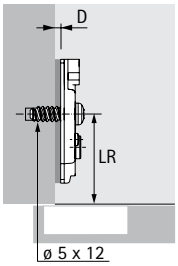

- For ø 5 x 12 mm holes
- Quality classification under EN 15570, Level 3
- Hole spacing 32 mm
- Eccentric cam height adjustment ± 2 mm
- Steel, nickel plated

Hole line distance LR mm	Order no. / Distance D mm				PU
	0.0	1.5	3.0	5.0	
37	9 075 080	9 075 081	9 075 082	9 075 083	50 ea.
37	9 071 665	9 071 666	9 071 667	9 071 668	200 ea.

Cross mounting plate with expanding sockets and special screws

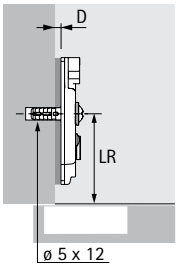

- For ø 5 x 12 mm holes
- Quality classification under EN 15570, Level 3
- Hole spacing 32 mm
- Cam height adjustment ± 2 mm
- Steel, nickel plated

Hole line distance LR mm	Order no. / Distance mm				PU
	0.0	1.5	3.0	5.0	
37	9 075 070	9 075 071	9 075 072	9 075 073	50 ea.
37	9 071 655	9 071 656	9 071 657	9 071 658	200 ea.

- **System 8099 mounting plates with eccentric cam height adjustment**
- **For Sensys and Intermat**

Cross mounting plate with expanding sockets and special screws

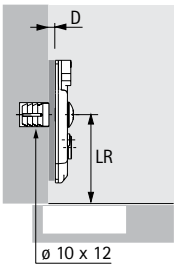

- For ø 10 x 12 mm holes
- Quality classification under EN 15570, Level 3
- Hole spacing 32 mm
- Eccentric cam height adjustment ± 2 mm
- Steel, nickel plated

Hole line distance LR mm	Order no. / Distance mm				PU
	0.0	1.5	3.0	5.0	
37	9 075 075	9 075 076	9 075 077	9 075 078	50 ea.
37	9 071 660	9 071 661	9 071 662	9 071 663	200 ea.

Linear mounting plate for screwing on

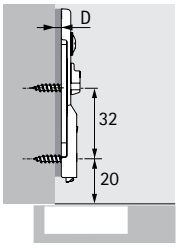

- For 3.5 mm ø x 16 mm countersunk screws
- Quality classification under EN 15570, Level 3
- Eccentric cam height adjustment ± 2 mm
- Steel, nickel plated

Hole line distance LR mm	Order no. / Distance D mm			PU
	1.5	3.0	5.0	
20	9 075 095	9 075 096	9 075 097	50 ea.

Linear mounting plate for pressing in

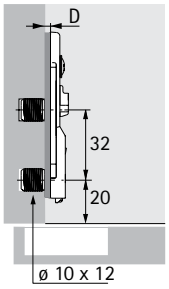

- For ø 10 x 12 mm holes
- Quality classification under EN 15570, Level 3
- Eccentric cam height adjustment ± 2 mm
- Steel, nickel plated

Hole line distance LR mm	Order no. / Distance D mm			PU
	1.5	3.0	5.0	
20	9 075 098	9 075 099	9 075 100	50 ea.

Adapter plate

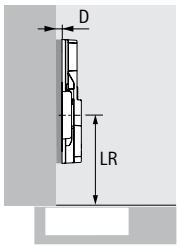

- For connecting parallel adapters
- Quality classification under EN 15570, Level 3
- For use in 28 or 37 mm hole line
- For use with parallel adapter
- Hole spacing 32 mm
- Oblong hole height adjustment ± 3 mm (versions for screwing on / with premounted Euro screws
- Oblong hole height adjustment ± 2 mm (version with expanding sockets)
- Zinc die-cast nickel plated

Mounting method	Drilling mm	Order no. / Distance D mm			PU
		0.0	1.5	3.0	
For screwing on with ø 4.5 x 16 mm flat head screws	–	**9 106 989**	**9 106 990**	**9 106 991**	50 ea.
With premounted Euro screws	ø 5 x 12	**9 106 986**	**9 106 987**	**9 106 988**	50 ea.
With expanding sockets and special screws	ø 10 x 12	**9 106 983**	**9 106 984**	**9 106 985**	50 ea.

Parallel adapter

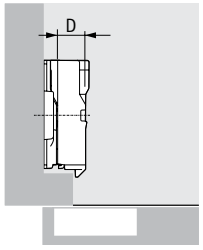

- For screwing onto the adapter plate
- In combination with the adapter plate, distances of up to 27 mm can be reached
- Including fixing screw
- A trial mounting is recommended
- Zinc die-cast nickel plated

Distance D mm	Order no.	PU
8.0	**9 072 537**	50 ea.
12.0	**9 072 538**	50 ea.
22.0	**9 072 539**	50 ea.

Angle adapter for cross mounting plates

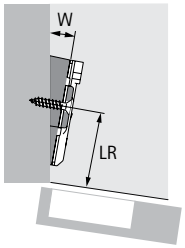

- For realizing face angle applications
- 5° angle adapter can be stacked on the other angle adapters
- A trial mounting is recommended
- Zinc die-cast nickel plated

Angle W°	Order no.	PU
5	**9 072 533**	50 ea.
10	**9 072 534**	50 ea.
15	**9 072 535**	50 ea.
20	**9 072 536**	50 ea.

Can only be used with LR37 cross mounting plates for screwing on, screw length is defined by the specific configuration

Cover cap for Sensys hinge cup

- Can be used for hinges with cup in Sensys design
- Can be used for all attachment options apart from Fix and premounted wood screw
- Steel, nickel plated

Version	Order no.	PU
For TH / TS	**9 088 251**	50 ea.
For TB	**9 088 252**	50 ea.

Cover cap for Sensys hinge arm

- Can be used with Sensys hinges apart from 8657i / 8657 / 8687
- Cover caps with customised embossed or printed logo on request
- Steel, nickel plated

Version	Order no.	PU
Neutral	**9 088 249**	50 ea.
Embossed with Hettich logo	**9 088 250**	50 ea.

Fixing screw

- Self tapping ø 4 x 11 mm countersunk screw
- For ø 3.6 x 8 mm holes
- For use with hinges for screwing on in combination with hard door materials, such as solid surface material or full core panel
- Not suitable for use with engineered wood
- Steel, nickel plated

Version	Order no.	PU
For drilling ø 3,6 x 8 mm	**9 217 435**	1/100 ea.
For drilling ø 5 x 8 mm	**9 238 321**	1/100 ea.

Opening angle limiter for Sensys 8646i

- For reducing the opening angle of doors with adjoining elements
- This avoids damaging the front panel
- Also suitable for hinges without Silent System, without self closing feature
- Plastic, anthracite
- For installation advice, see technical information

Version	Order no.	PU
Limitation from 110° to 85°	**9 076 440**	50 ea.

Full overlay door

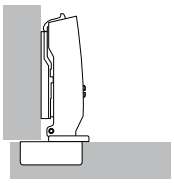

The door is in front of the cabinet side and only a small gap remains at the side within which the door can open reliably. Alternatively, the door can also be overlaid fully. In this case sufficient space must be allowed at the side for the required minimum reveal. Straight hinges are used.

Half overlay door

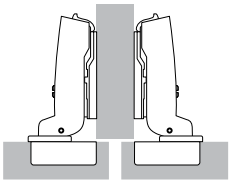

This is where two doors are positioned in front of a cabinet centre panel, with the required overall reveal between them (at least 2 x minimum reveal). In other words, each door has a smaller overlay and cranked hinges are therefore used.

Inset door

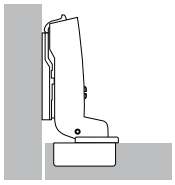

The door is positioned inside the carcase, i.e. next to the carcase side. Here too, a gap is needed so that the door can open reliably. Highly cranked hinges are used here. For an inset door, the mounting plate must be set back by the thickness of the door + 1 mm as well as by any chosen door offset.

Minimum reveal

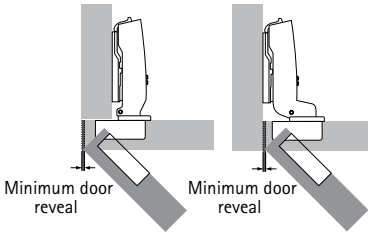

For overlay and inset door
The minimum reveal (also known as the door clearance or minimum clearance) is the space required at the side for opening the door. The size of the minimum reveal depends on the cup distance C, the door thickness and the type of hinge selected. Rounded door edges reduce door clearance. The minimum reveal is shown in the table for the respective hinge type.

Minimum reveal

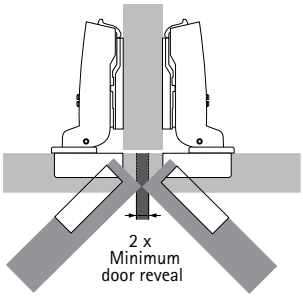

For half overlay doors
The total reveal selected between the doors must be at least twice the door clearance. Both doors can then be opened at the same time.

Cup distance C

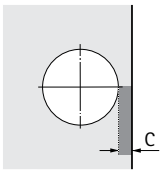

Cup distance C is the distance between door edge and the edge of the cup drilling. The greater the distance selected for cup distance C, the smaller door clearance will be, i.e. the minimum reveal required.

Overlay / Base

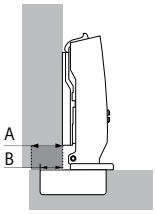

A = Overlay
B = Base

Overlay refers to the projection of the door in front of the carcase side. Base refers to the projection of the cup in front of the carcase side for a mounting plate distance of 0 mm.

Number of hinges per door

Door width, height and weight as well as the material quality of the door are decisive factors determining the number of hinges required.

The factors encountered in practice differ widely from case to case. For this reason, the number of hinges specified in the diagram must be understood as a guide only. If in doubt, it is recommended to carry out a trial mounting and adjust the number of hinges as necessary. For reasons of stability, space X between the hinges must always be made as large as possible. Distance X must be at least 280 mm.

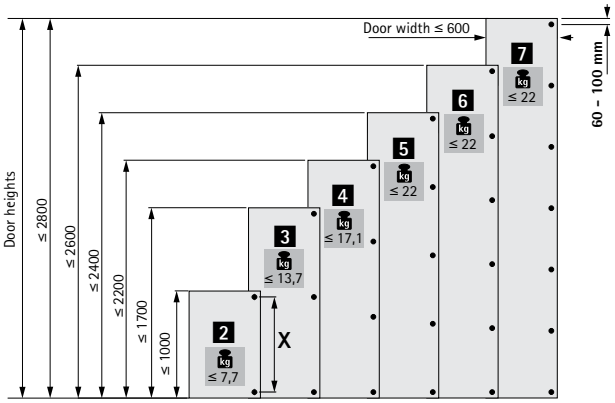

General calculation of distances

Mounting plates are available in various distances. The effective height of the mounting plate is defined by distance D. Distance D is embossed on the top of each mounting plate. A larger distance D reduces the overlay for full and half overlay applications. On inset doors, a larger distance D increases the door reveal. Before determining the required distance, check whether the desired reveal is equal to or greater than the required minimum reveal. If the desired reveal is less than the required minimum reveal, the required minimum reveal can be reduced by increasing cup distance C or by producing radii on the door edges.

Calculation of distances

For overlay and half overlay doors
The required distance D can be determined after checking the minimum reveal. Ideally, door overlay and cup distance should be selected to produce distance D that is available as mounting plate.

Example: Determine distance from table
Overlay = 14 mm and cup distance C = 4.5 mm yield a distance of 3.0 mm.

Example: Distance determined according to calculation formula
Hinge for overlay door, base B = 12.5 mm
Distance D = cup distance C + base B - overlay A
Distance D = 4.5 mm + 12.5 mm - 14 mm = 3.0 mm

Intermediate distances, which are not available as mounting plate distance, are achieved by adjusting the hinge overlay.

Overlay	Cup distance C mm					
mm	3,0	4,0	4,5	5,0	6,0	7,0
	Distance D mm					
10	5,5	6,5	7,0	7,5	8,5	9,5
11	4,5	5,5	6,0	6,5	7,5	8,5
12	3,5	4,5	5,0	5,5	6,5	7,5
13	2,5	3,5	4,0	4,5	5,5	6,5
14	1,5	2,5	3,0	3,5	4,5	5,5
15	0,5	1,5	2,0	2,5	3,5	4,5
16		0,5	1,0	1,5	2,5	3,5
17			0,0	0,5	1,5	2,5
18					0,5	1,5
19						0,5

Calculation of distances

For inset doors
When calculating the mounting plate distance using the table for inset doors, allowance is automatically made for the reveal that is shown as the minimum reveal produced by cup distance C and door thickness in the table of minimum reveals. If a reveal is to be produced that is larger than this minimum reveal, select a mounting plate distance of the appropriate size.

Example: Determining distance from table
From the table, a door thickness = 20 mm and cup distance C = 4.5 mm produces a mounting-plate distance of 1.5 mm. This creates the required minimum reveal of, e.g., 1 mm. If a reveal of 2.5 mm is required instead, select a mounting-plate distance 1.5 mm larger. In this example, that means a distance of 3 mm instead of 1.5 mm.

Example: Distance determined using the calculation formula
Hinge for inset application, basis B = - 4 mm
Distance D = cup distance C + basis B + reveal F
Distance D = 4.5 mm - 4 mm + 1 mm = 1.5 mm

Intermediate values not available as mounting plate distances are achieved by adjusting the hinge overlay.

Door thickness	Cup distance C mm					
mm	3,0	4,0	4,5	5,0	6,0	7,0
	Distance D mm					
15		0,2	0,7	1,2	2,2	3,2
16		0,3	0,8	1,3	2,3	3,3
17		0,4	0,9	1,4	2,4	3,4
18		0,6	1,1	1,6	2,6	3,5
19		0,8	1,3	1,8	2,7	3,7
20	0,1	1,0	1,5	2,0	3,0	3,9
21	0,4	1,3	1,8	2,3	3,2	4,2
22	1,2	1,8	2,2	2,6	3,6	4,5

Installation

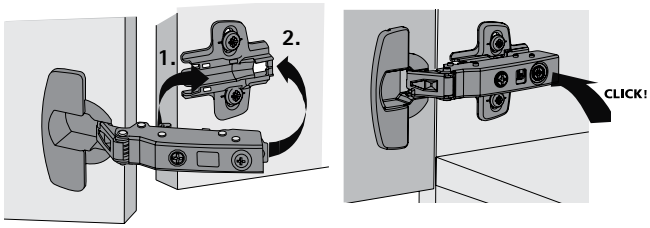

Removal

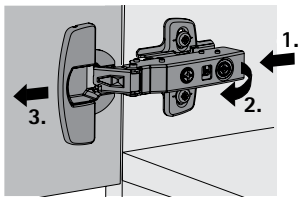

Overlay adjustment

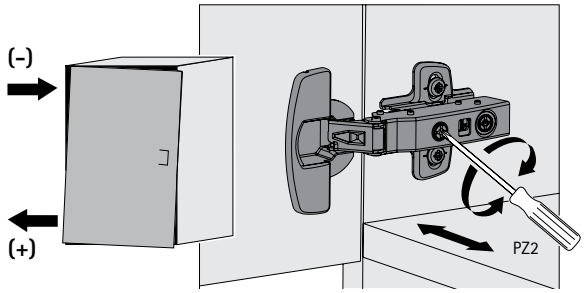

Depth adjustment

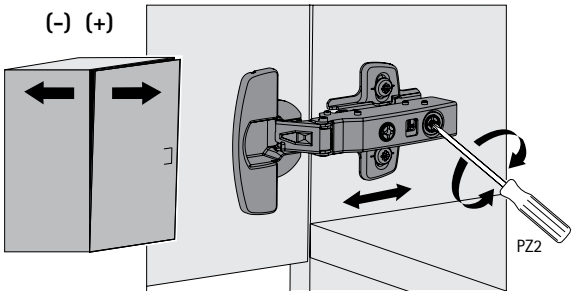

Oblong hole height adjustment

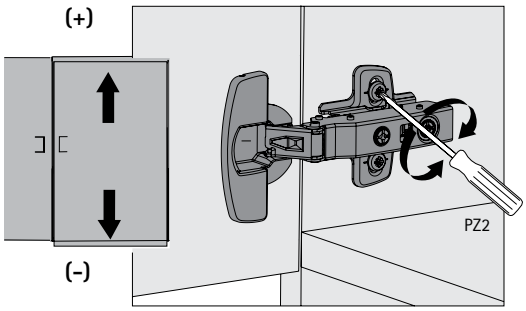

Cam height adjustment

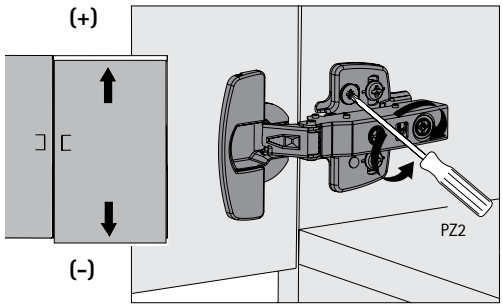

Cup installation for pressing in

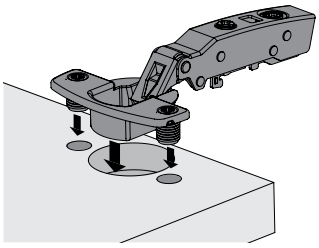

Cup installation with premounted expanding sockets

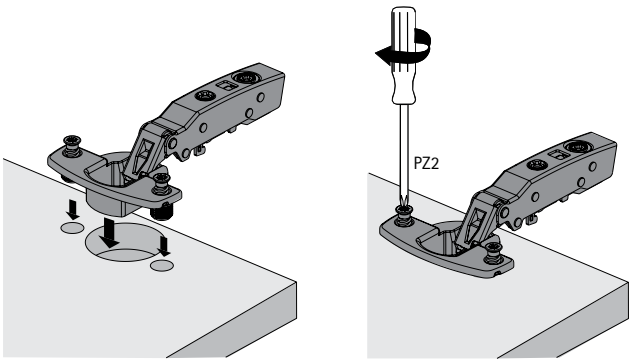

Cup mounting versions

Door material	Cup assembly	Drilling pattern	Mounting hole mm	Fixing screw
Chipboard, MDF	For pressing in TH 53 TB 53	TH: 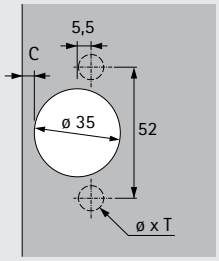	TH: ø 10 x 8 TB: ø 8 x 8	-
	Premounted expanding sockets TH 58 TB 58	TB: 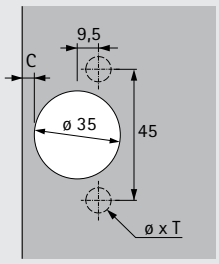		
Aluminium, HPL, solid surface material	For screwing on TH 52 TB 52		ø 3,6 x 8 ø 5 x 8	**9 217 435** **9 238 321**

Note:
The method selected for attaching the hinge to the door must be suitable for the type and quality of door material and tested for a secure fit.

Installing the opening angle limiter for thin door hinge 8646i

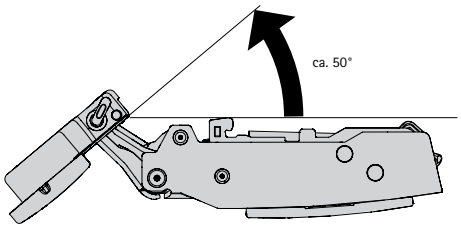

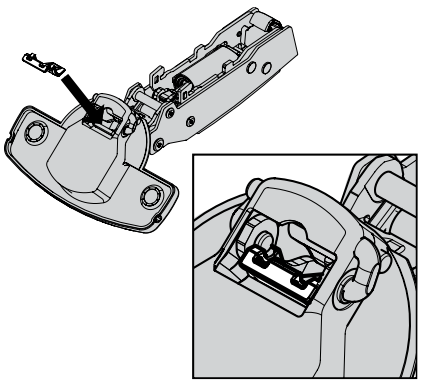

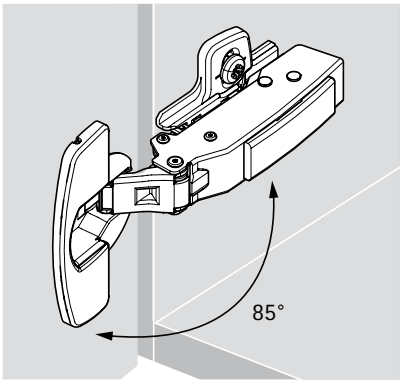

Quality that meets all the demands

Quality that meets all the demands
The quality of hinges is subject to a process of continuous monitoring. Hettich fittings comply with the national and international quality standards of the markets our customers operate in. The diagrams below show examples of the principles behind some of the testing processes.

Application area
Hettich hinges can be used in living room, kitchen, bathroom and office furniture both in the home and business environment.

Loading capacity
The quality levels indicated on products comply with the requirements of EN 15570 and satisfy the overload tests at the specified level. We will be pleased to provide any further information you may require.

Corrosion test
Hettich hinges satisfy the corrosion requirements under EN ISO 9227-2012 in accordance with the 48 h neutral salt spray test (NSS) as well as DIN EN ISO 6270-2-2012 in accordance with the 96 h alternating condensation water climate test with alternating air humidity and temperature (AHT).

Quality assurance
The processes for assuring the quality of Hettich hinges are certified under EN ISO 9001, Cert. No. DE8000209.

Endurance test

The door is subjected to a specific number of opening and closing cycles.

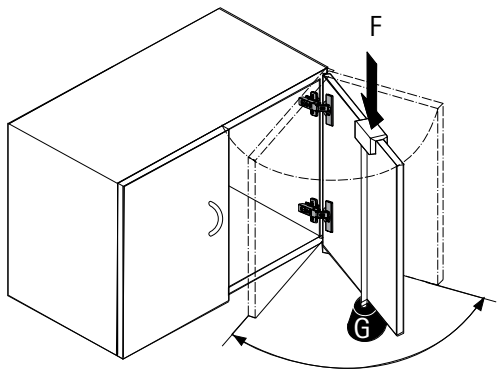

Closing test

The door is opened by 30° and pushed closed from this position by means of a pulley and falling weight.

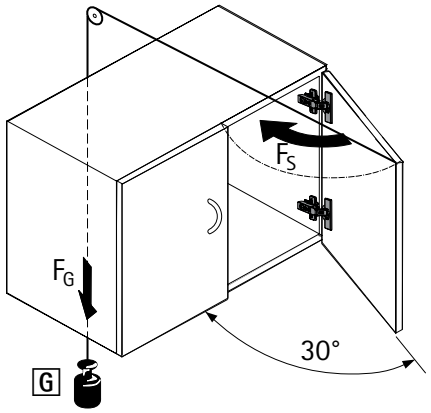

Horizontal test

The door is over opened with a defined test force F. (This test only applies to hinges with an opening angle < 135°.)

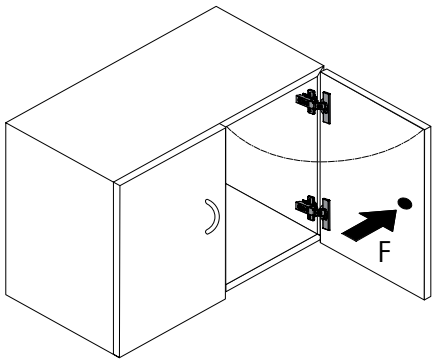

Vertical test

The door is subjected to a specific number of opening and closing cycles under a defined additional load G.

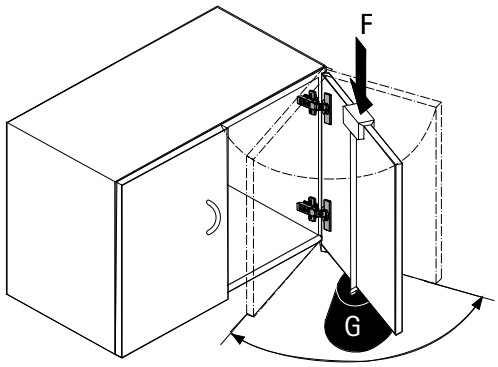

Hettich and the environment: committed to responsible practice, active protection, innovative thinking.

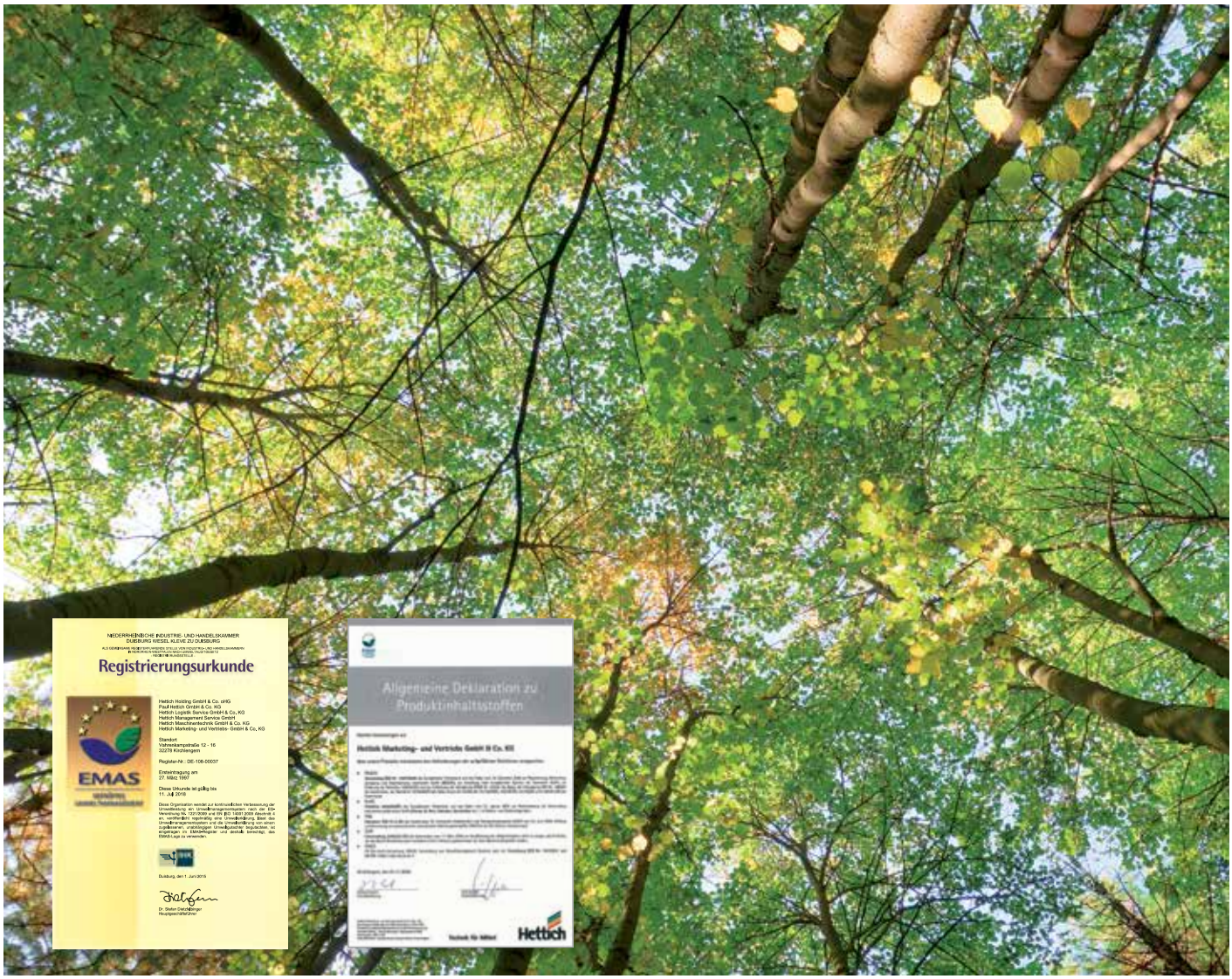

Hettich accepts responsibility for the world we live in.
This awareness defines the strict policy of environmental management we practise. Our environmental officer has taken personal responsibility for these aspects throughout the group of companies over a period of many years. In addition, a separate environment committee has been established for each production site. We regard statutory provisions as minimum requirements. At significant sites we also implement the stringent EMAS Regulation. And we drive forward developments that in future will help to save even more raw materials and support the necessary endeavours towards sustainability.

Hettich standard for product materials

Hettich underpins its commitment by applying an internal standard for product materials. This ensures that every product – from production to disposal – satisfies all environmental requirements. Hettich products are durable. Appropriately foresighted, our rigorous standards are formulated to ensure that international legislation is met as well. This provides a reliable basis for marketing furniture worldwide.

Hettich environmental management

In 1996 Hettich started introducing effective environmental management systems under the stringent EMAS Regulation (currently: EC Regulation No. 761/2001, including EN ISO 14.001/2004). This not only enables us to improve our environmental performance on a broad front but also achieve a high level of safety which, not least, also benefits our customers. This is why we also require our suppliers to meet the necessary minimum standards of environmental protection, industrial safety, health care and social welfare.
The results achieved in the drawer runner and drawer system product segment at the Kirchlengern operation illustrate the impressive effects these measures have and verifiably demonstrate our tireless endeavours to translate words into action:

Relief to the environment between 1997 and 2008:

Specific water consumption:	56 per cent
Specific power consumption:	21 per cent
Specific heat consumption:	84 per cent
Specific CO_2 emissions:	29 per cent

www.hettich.com

Order No.: 9 219 023
1510-025_Sensys_Dünntür_0717_HON/en

INTERFER

Technik für Möbel

Hettich